A0 INSTALLATION DRAWING

IF THIS DOCUMENT IS PRINTED IN HARDCOPY, IT IS FOR INFORMATION USE ONLY AND THEREFORE IS NOT SUBJECT TO UPDATING CONTROLS. ALWAYS REFER TO SOLIDWORKS VIEWER FOR LATEST ISSUE

FIRST ANGLE PROJECTION

AP Racing
Wheler Road
Coventry
CV3 4LB
Tel: +44 024 7663 9595
Fax: +44 024 7663 9559
e-mail: sales@apracing.co.uk
Web site: HTTP://www.apracing.com

GENERAL DESCRIPTION

THIS UNIQUE PULL TYPE DESIGN ALLOWS THE PUSHROD TO REMAIN STRAIGHT, ELIMINATING ALL SIDE LOADS MAKING IT THE MOST EFFICIENT PEDAL BOX ON THE MARKET. THE CYLINDERS ARE MOUNTED UNDER THE DRIVERS FEET FOR OPTIMUM SPACE UTILISATION AND ACCESS. MINIMUM HYSTERESIS AND BALANCE VARIATION ARE ASSURED BY THE USE OF NEEDLE ROLLER BEARINGS IN THE CENTRE TRUNNION.

FEATURES

- LIGHTWEIGHT ALUMINIUM BASE, MACHINED FROM SOLID.
- ALL PEDALS ARE MACHINED FROM ALUMINIUM BILLET.BRAKE PEDAL IS PIVOTED BY BALL BEARINGS TO INCREASE SMOOTHNESS.
- DESIGNED FOR USE WITH CP6465 MASTER CYLINDERS.
- ADJUSTABLE FOOT PADS FOR EXTRA DRIVER COMFORT.
- ADJUSTABLE THROTTLE PEDAL POSITION, LINKAGE WITH A DOUBLE TORSION SPRING FOR A POSITIVE PEDAL RETURN.
- ADJUSTABLE PEDAL STOPS ON CLUTCH AND TROTTLE.
- BRAKE AND CLUTCH PEDAL RATIO 4.8 : 1.
- ALL THREADS METRIC.
- WEIGHT 3.4 KG APPROX WITHOUT CYLINDERS, 4.15KG APPROX WITH CYLINDERS.
- THROTTLE PEDAL FITTED WITH ROTARY SENSOR

PART NUMBERS

CP5516-88TS - PEDAL BOX ASSEMBLY, WITH THROTTLE SENSOR (AS SHOWN)

CP5516-88 - PEDAL BOX ASSEMBLY, WITHOUT THROTTLE SENSOR

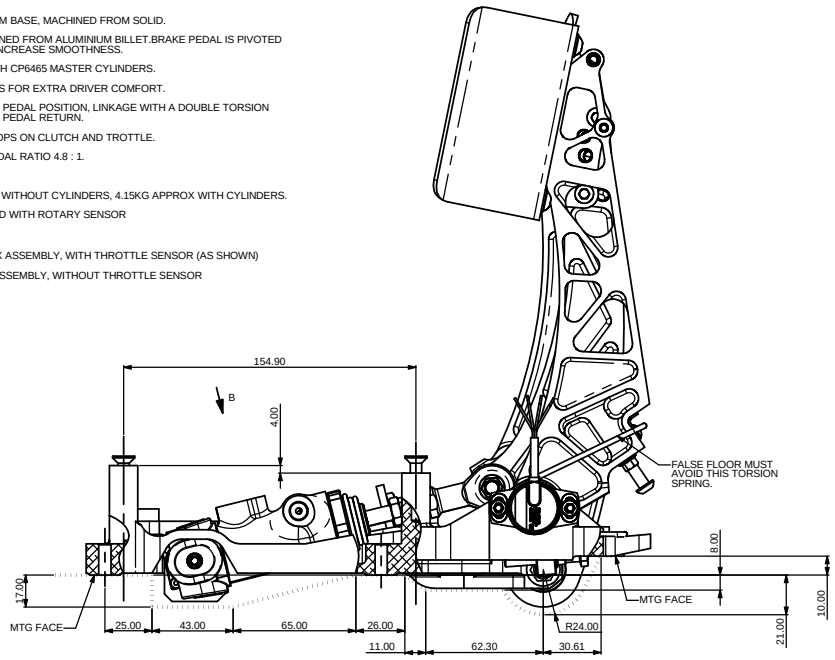

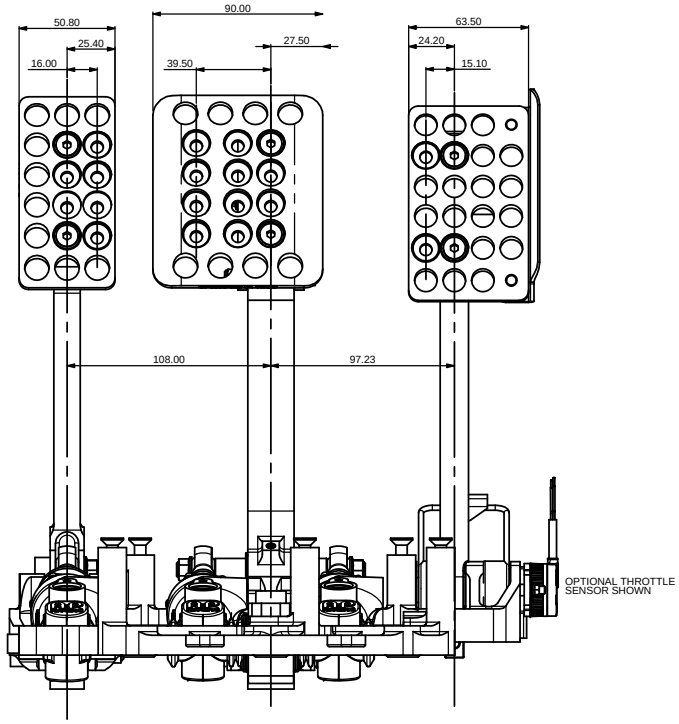

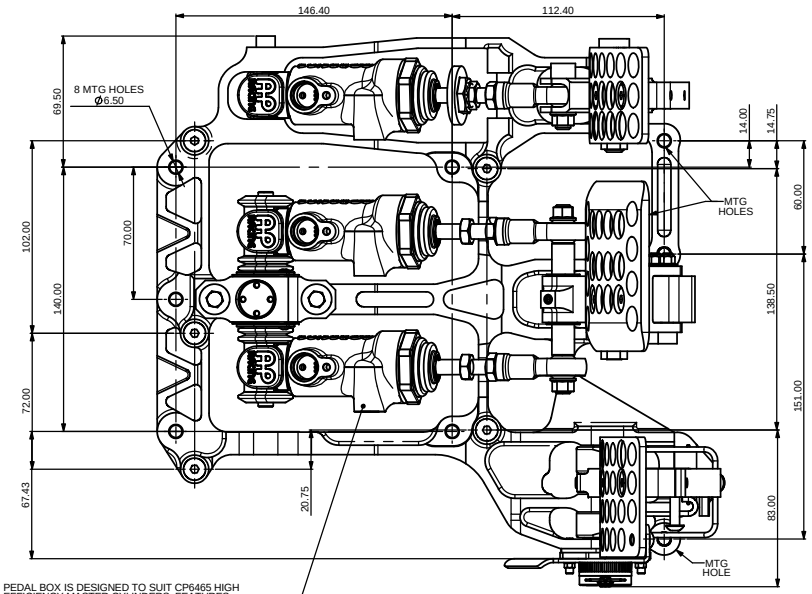

PEDAL BOX IS DESIGNED TO SUIT CP6465 HIGH EFFICIENCY MASTER CYLINDERS, FEATURES:
- BUILT-IN LOW FRICTION CLEVIS.
- SPECIAL INLET TO ALLOW A LOW FITTING.
- M10x1.0 OUTLET PORT, SET AT 90 Deg.
- 25.4mm OF STROKE.

MASTER CYLINDERS ARE NOT SUPPLIED WITH THIS PEDAL BOX.

FOR INFORMATION ON CYLINDER SIZES PLEASE CONTACT AP RACING OR OBTAIN DRAWING CP6465-1CD FROM THE WEBSITE.

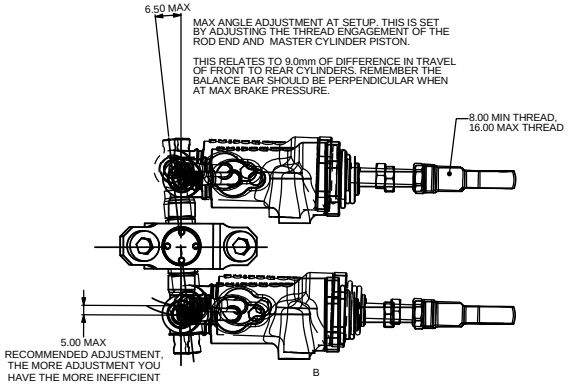

SETTING UP THE BALANCE BAR

ADJUST THE PUSHRODS SO THAT THE BALANCE BAR IS PERPENDICULAR TO THE PUSHRODS UNDER MAXIMUM LOAD. THE SYSTEM IS THEN SQUARE. IT IS NOT IMPORTANT THAT THE SYSTEM IS SQUARE WHEN RELEASED, BUT IT HAS TO BE UNDER LOAD.

FOR MAXIMUM EFFICIENCY, IT IS RECOMMENDED THAT THE PEDAL IS AT RIGHT ANGLE WITH THE PUSHRODS UNDER MAXIMUM BRAKING LOAD; AND ALSO THE BALANCE BAR CENTRAL WITH BETTER SET MASTER CYLINDER SIZES HELPS REDUCE INEFFICIENCY.

ALSO MAKE SURE THAT THE MASTER-CYLINDER PISTONS FULLY RETURN BEFORE USE. THIS CAN BE CHECKED BY FEELING THE PUSHRODS FOR SLIGHT MOVEMENTS THERE SHOULD NOT BE ANY EXCESSIVE LOOSE MOVEMENT.

Issue No.	Alterations: Date & No.	Particulars	Zone	Initials
1	B6228 20/06/11	FIRST ISSUE		SAT
2	B6228 05/12/11	THROTTLE SENSOR PART No. CHANGED IN TABLE		SAT
3	B6660 29/11/12	CP5516-199 REPLACES CP5516-189		RS
4	B6722 19/02/13	MORE ACURATE SENSOR DETAILS ADDED.		CDA
5	B6802 11/06/13	DRAWING NUMBER CHANGED.		CDA
6	B6985_01 30/01/14	SENSOR FIXING UPDATED		JN
7	24/04/14 B7022_04	DRAWING VEIWS UPDATED STUDS, WASHERS AND NUTS ADDED AS KIT TO -88		JN
8	12/01/15 B7022	THROTTLE STOP KIT ADDED		CH
9	12/02/15 B7022	THROTTLE STOP KIT NOTES UPDATED		CH
10	08/08/18 B7841	**SHEET 4** THROTTLE PIVOT 29D TOLERENCES ADDED 3.06-3.00. SENSOR SHAFT DIMENSIONS ADDED 2.975/2.925	L16 R12	BAT

SCALE 1:1	SHEET 1 OF 4
DRAWN	Steve Thomas
APPROVED	
DERIVED FROM	CP5516-7

TITLE
FLOOR MTG REVERSE PULL TYPE
PEDAL BOX + THROTTLE SENSOR

DRG NO. CP5516-88CD

A0 INSTALLATION DRAWING

IF THIS DOCUMENT IS PRINTED IN HARDCOPY, IT IS FOR INFORMATION USE ONLY AND THEREFORE IS NOT SUBJECT TO UPDATING CONTROLS. ALWAYS REFER TO SOLIDWORKS VIEWER FOR LATEST ISSUE

FIRST ANGLE PROJECTION

AP Racing
Wheler Road
Coventry
CV3 4LB
Tel: +44 024 7663 9595
Fax: +44 024 7663 9559
e-mail: sales@apracing.co.uk
Web site: HTTP://www.apracing.com

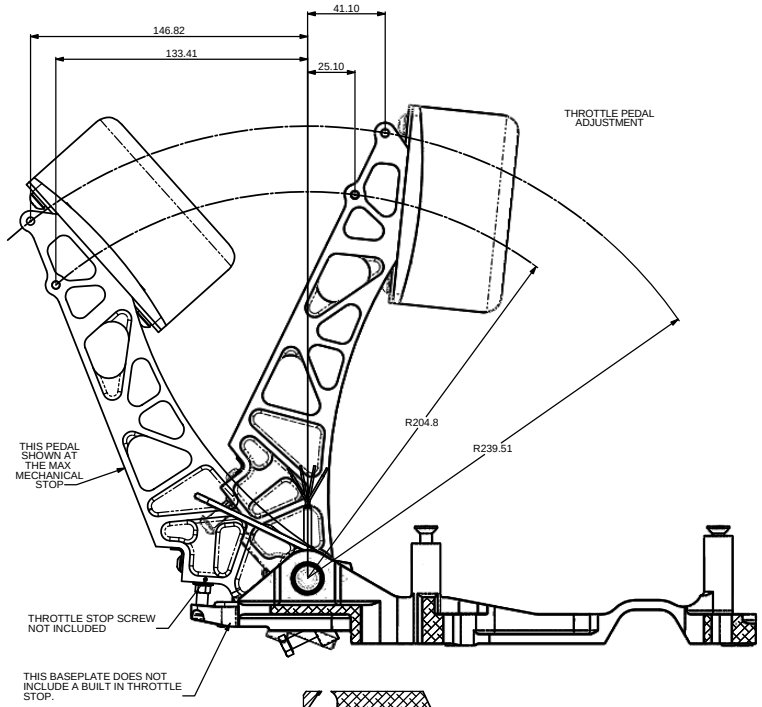

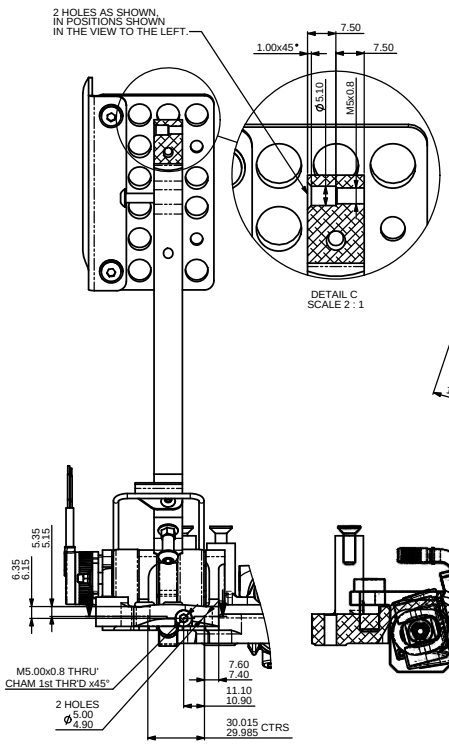

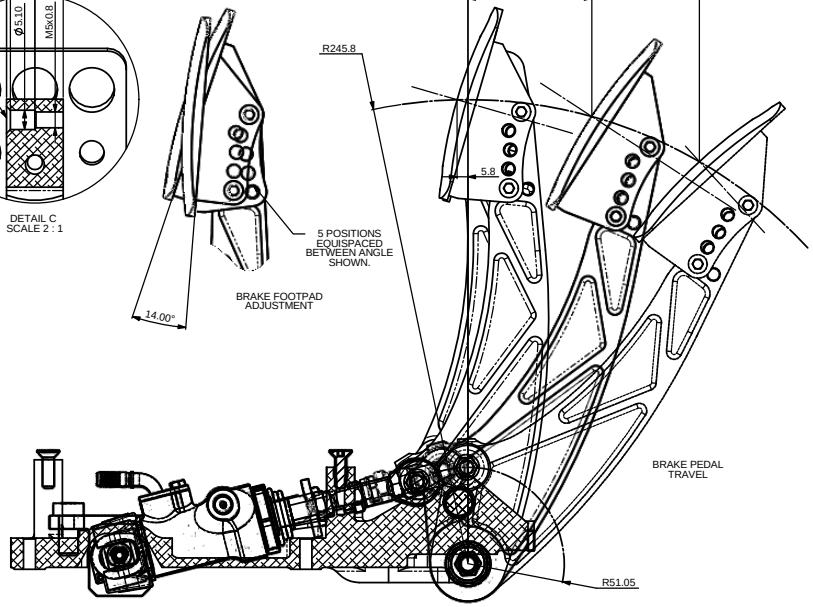

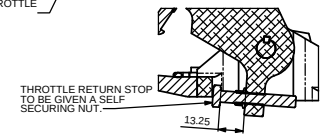

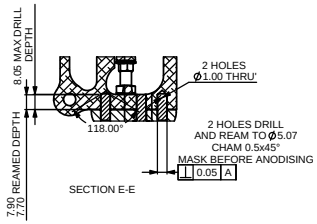

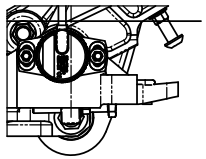

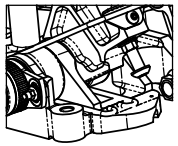

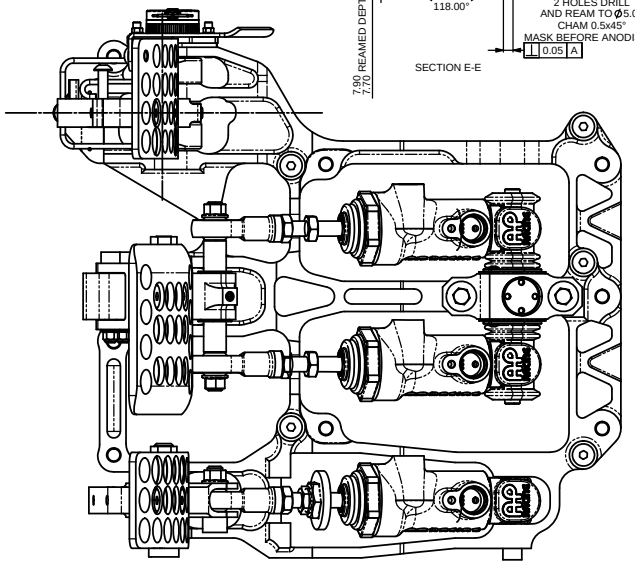

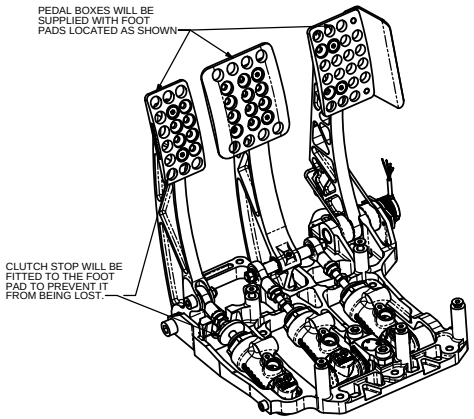

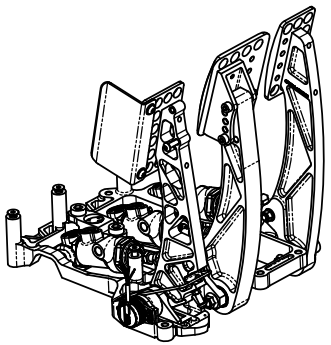

ISOMETRIC VIEWS
SCALE 1:2

Issue No.	Alterations		Zone	Initials
	Date & No.	Particulars		
#	#	SEE SHEET 1 FOR ISSUE CHANGES.	#	#

SCALE 1:1	SHEET 2 OF 4
DRAWN	Steve Thomas
APPROVED	
DERIVED FROM	CP5516-7

TITLE
FLOOR MTG REVERSE PULL TYPE
PEDAL BOX + THROTTLE SENSOR

DRG NO. CP5516-88CD

A0 INSTALLATION DRAWING

IF THIS DOCUMENT IS PRINTED IN HARDCOPY, IT IS FOR INFORMATION USE ONLY AND THEREFORE IS NOT SUBJECT TO UPDATING CONTROLS. ALWAYS REFER TO SOLIDWORKS VIEWER FOR LATEST ISSUE

FIRST ANGLE PROJECTION

AP Racing
Wheler Road
Coventry
CV3 4LB
Tel: +44 024 7663 9595
Fax: +44 024 7663 9559
e-mail: sales@apracing.co.uk
Web site:HTTP://www.apracing.com

Issue No.	Alterations: Date & No.	Particulars	Zone	Initials
#	#	SEE SHEET 1 FOR ISSUE CHANGES.	#	#

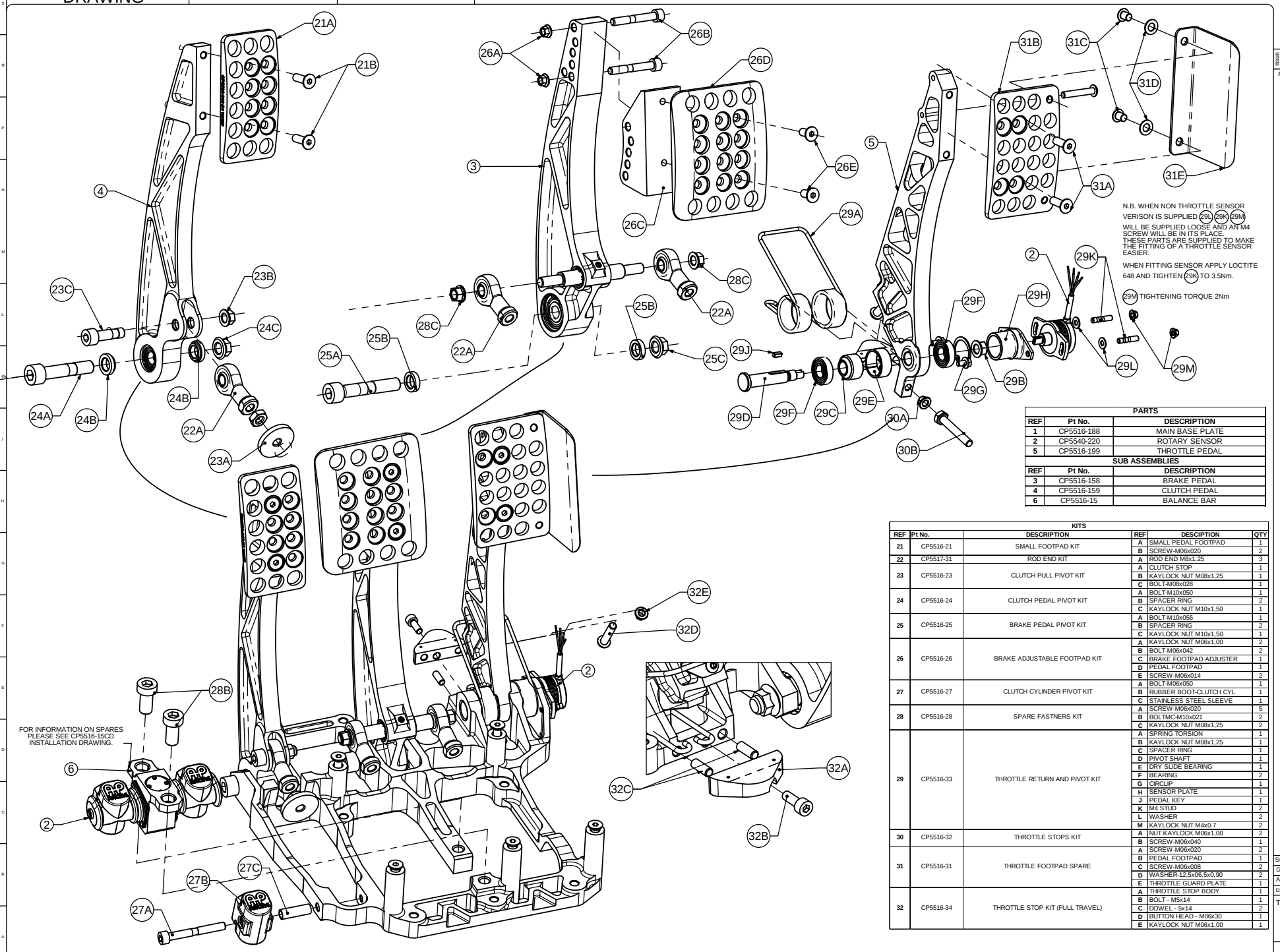

N.B. WHEN NON THROTTLE SENSOR VERISON IS SUPPLIED (29L) (29K) (29M) WILL BE SUPPLIED LOOSE AND AN M4 SCREW WILL BE IN ITS PLACE. THESE PARTS ARE SUPPLIED TO MAKE THE FITTING OF A THROTTLE SENSOR EASIER.

WHEN FITTING SENSOR APPLY LOCTITE 648 AND TIGHTEN (29K) TO 3.5Nm.

(29M) TIGHTENING TORQUE 2Nm

FOR INFORMATION ON SPARES PLEASE SEE CP5516-15CD INSTALLATION DRAWING.

PARTS

REF	Pt No.	DESCRIPTION
1	CP5516-188	MAIN BASE PLATE
2	CP5540-220	ROTARY SENSOR
5	CP5516-199	THROTTLE PEDAL
SUB ASSEMBLIES		
REF	**Pt No.**	**DESCRIPTION**
3	CP5516-158	BRAKE PEDAL
4	CP5516-159	CLUTCH PEDAL
6	CP5516-15	BALANCE BAR

KITS

REF	Pt No.	DESCRIPTION	REF	DESCIPTION	QTY
21	CP5516-21	SMALL FOOTPAD KIT	A	SMALL PEDAL FOOTPAD	1
			B	SCREW-M06x020	2
22	CP5517-31	ROD END KIT	A	ROD END M8x1.25	3
23	CP5516-23	CLUTCH PULL PIVOT KIT	A	CLUTCH STOP	1
			B	KAYLOCK NUT M08x1,25	1
			C	BOLT-M08x028	1
24	CP5516-24	CLUTCH PEDAL PIVOT KIT	A	BOLT-M10x050	1
			B	SPACER RING	2
			C	KAYLOCK NUT M10x1,50	1
25	CP5516-25	BRAKE PEDAL PIVOT KIT	A	BOLT-M10x056	1
			B	SPACER RING	2
			C	KAYLOCK NUT M10x1,50	1
26	CP5516-26	BRAKE ADJUSTABLE FOOTPAD KIT	A	KAYLOCK NUT M06x1,00	2
			B	BOLT-M06x042	2
			C	BRAKE FOOTPAD ADJUSTER	1
			D	PEDAL FOOTPAD	1
			E	SCREW-M06x014	2
27	CP5516-27	CLUTCH CYLINDER PIVOT KIT	A	BOLT-M06x050	1
			B	RUBBER BOOT-CLUTCH CYL	1
			C	STAINLESS STEEL SLEEVE	1
28	CP5516-28	SPARE FASTNERS KIT	A	SCREW-M06x020	5
			B	BOLTMC-M10x021	2
			C	KAYLOCK NUT M08x1,25	2
29	CP5516-33	THROTTLE RETURN AND PIVOT KIT	A	SPRING TORSION	1
			B	KAYLOCK NUT M08x1,25	1
			C	SPACER RING	1
			D	PIVOT SHAFT	1
			E	DRY SLIDE BEARING	1
			F	BEARING	2
			G	CIRCLIP	1
			H	SENSOR PLATE	1
			J	PEDAL KEY	1
			K	M4 STUD	2
			L	WASHER	2
			M	KAYLOCK NUT M4x0.7	2
30	CP5516-32	THROTTLE STOPS KIT	A	NUT KAYLOCK M06x1,00	2
			B	SCREW-M06x040	1
31	CP5516-31	THROTTLE FOOTPAD SPARE	A	SCREW-M06x020	2
			B	PEDAL FOOTPAD	1
			C	SCREW-M06x008	2
			D	WASHER-12,5x06,5x0,90	2
			E	THROTTLE GUARD PLATE	1
32	CP5516-34	THROTTLE STOP KIT (FULL TRAVEL)	A	THROTTLE STOP BODY	1
			B	BOLT - M5x14	1
			C	DOWEL - 5x14	2
			D	BUTTON HEAD - M06x30	1
			E	KAYLOCK NUT M06x1.00	1

SCALE 1:1	SHEET 3 OF 4
DRAWN	Steve Thomas
APPROVED	
DERIVED FROM	CP5516-7

TITLE
FLOOR MTG REVERSE PULL TYPE
PEDAL BOX + THROTTLE SENSOR

DRG NO. CP5516-88CD

A0 ASSEMBLY DRAWING

FIRST ANGLE PROJECTION

THIS DRAWING IS CONFIDENTIAL AND IS SUPPLIED ON THE EXPRESS CONDITION THAT IT SHALL NOT BE LOANED OR COPIED OR DISCLOSED TO ANY OTHER PERSON OR USED FOR ANY OTHER PURPOSE WITHOUT THE WRITTEN CONSENT OF AP RACING LTD.

AP Racing
Wheler Road
Coventry
CV3 4LB
Tel: +44 024 7663 9595
Fax: +44 024 7663 9559
e-mail: sales@apracing.co.uk
Web site: HTTP://www.apracing.com

THROTTLE SENSOR DETAIL

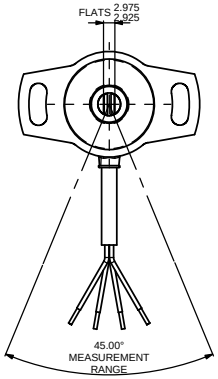

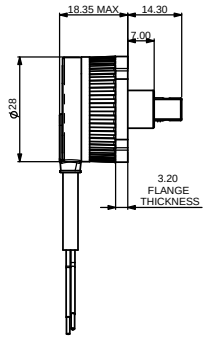

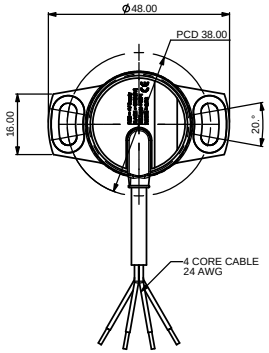

PERFORMANCE

Electrical

Measurement range		20° to 360° in 1° increments
Supply voltage	**Vdc**	9 to 30 (unregulated) and 5 ±0.5 (regulated)
Over voltage protection	**Vdc**	Up to 40 (-40 to +60°C)
Maximum supply current	**mA**	<25
Reverse polarity protection		Yes
Short circuit protection		
Output to GND		Yes
Output to supply		In 5V regulated mode only
Power-on settlement time	**S**	<1
Resolution	**%**	0.025 of measurement range (12 bit)
Non-linearity*	**%**	<±0.4
Temperature coefficient ppm/°C		<±30 in 5V supply mode; <±90 in 9-30V supply mode

* Non-linearity is measured using the least-squares method on a computerised calibration system

Analog Output

Voltage output range		
9-30V supply	**Vdc**	Absolute voltage, 0.1 to 4.9 over measurement range (±3%)
5V supply	**Vdc**	Ratiometric output voltage - 2 to 98% (A4) of Vs over measurement range (±1%)
Monotonic range	**Vdc**	0.05 (1%) and 4.95 (99%) nominal
Load resistance		10k minimum (resistive to GND)
Output noise	**mVrms**	<1
Input/output delay	**mS**	<2

Mechanical

Mechanical angle	**°**	360, continuous
Operating torque	**g-cm**	120 Max
Weight	**g**	<35
Mounting		Use 2 x M4 socket head cap screws and M4 washer - maximum tightening torque 2Nm
Phasing		When shaft ident mark is facing toward the cable exit, output is at mid travel. The sensor housing allows for ±10° adjustment via the mounting flange slots.

Environment

Protection class	IP68 (to 2m depth for 1 hour)
Life	20 million operations (10 x 106 cycles) of ±75°
Dither life	Contactless - no degradation due to shaft dither
Operational temperature† °C	-40 to +140 (5V supply) -40 to +135.7 (9V supply) Derate upper temperature limit by 1.7°C for every 1V increase in supply: e.g. -40 to +100 @30V
Storage temperature °C	-55 to +140
Vibration	BS EN 60068-2-64:1995 Sec 8.4 (31.4gn rms) 20 to 2000Hz Random
Shock	3m drop onto concrete
EMC Immunity level	BS EN 61000-4-3:1999, to 100V/m, 80MHz to 1GHz and 1.4GHz to 2.7GHz (2004/108/EC)

Other

Measurement Range	**°**	45 both channels
Output		Analog voltage
Output direction		Channel 1 clockwise, Channel 2 anti-clockwise
Cable length		0.5m

PIVOT SHAFT SLOT DETAIL

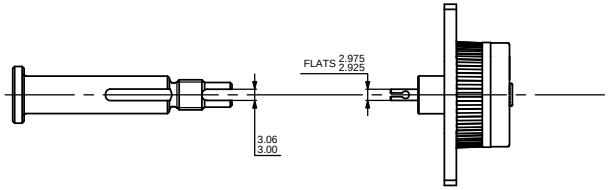

Electrical Connections

4-core cable: FDR-25 sheathed, with 55A spec (24AWG) cores

Cable colour	*Description*
Red	+V Supply
Yellow	Output 1
White	Output 2
Black	0V Supply (GND)

When connecting the sensor, care should be taken with the correct connections. The sensor is provided with reverse polarity protection and short circuit protection between outputs (Yellow & White) to GND (Black), but if the outputs (Yellow & White) are connected to the supply this will result in device failure.

Issue No.	Alterations: Date & No.	Alterations: Particulars	Zone	Initials
-	-	SEE SHEET 1 FOR ISSUE INFORMATION.	-	-

SCALE 2:1 | SHEET 4 OF 4

DRAWN: Steve Thomas
APPROVED:
DERIVED FROM:

TITLE: THROTTLE SENSOR SENSOR

DRG NO. CP5516-88CD